DO NOT SCALE

THIRD ANGLE PROJECTION

DIMENSIONS IN MILLIMETRES

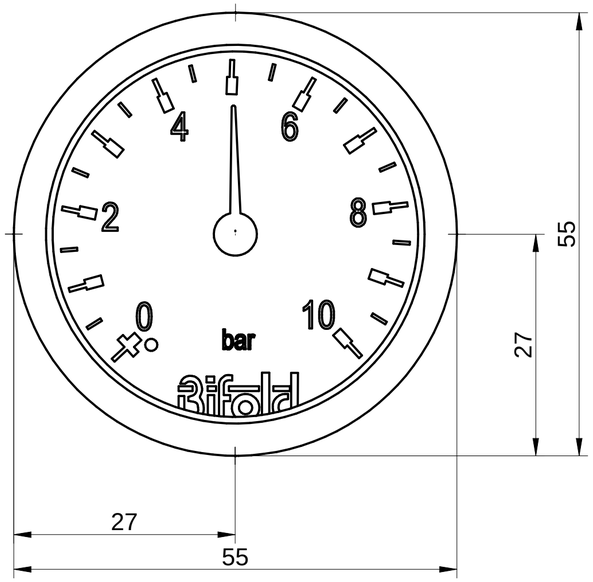

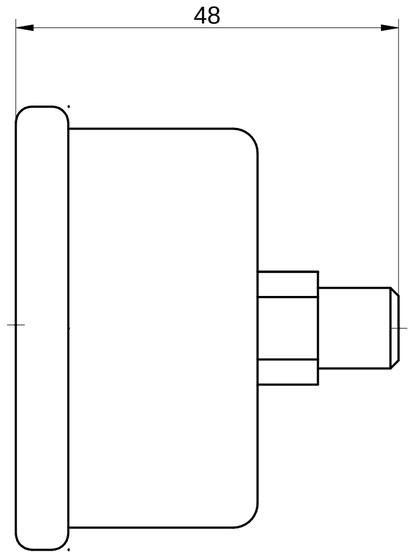

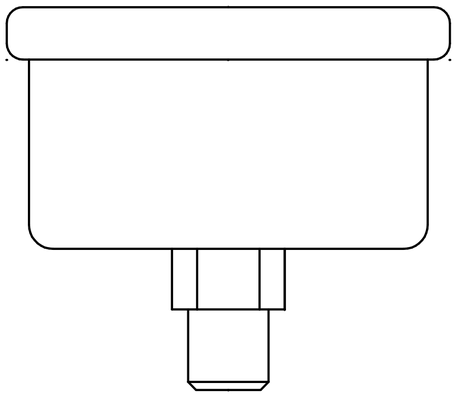

SCHEMATIC

REV	DATE	DRAWN	CHKD	REVISION
0	28.08.14	CONF		PRODUCTION ISSUE

NOTES :

1.) O-RING MATERIAL CODE 'X'
S = NITRILE
V = VITON
AL = FLUOROSILICONE
AG = SILICONE

2.) ALL DIMENSIONS NOMINAL UNLESS OTHERWISE STATED.

VALVE TYPES/USED ON

Bifold®

Bifold Fluidpower Limited
Bifold Group, Oldham Broadway Business Park, Chadderton, Gr. Manchester OL9 9XA
Telephone (44) 0161 345 4777 Fax (44) 0161 345 4780

PROJECT TITLE	PROJECT No.				
X5-X					
DRAWING TITLE	DRAWING No.	REV.			
GENERAL INSTALLATION	0-IN0774	0			
DRAWN	DATE	CHECKED	DATE	APPROVED	DATE
CONF	28.08.14				

Copyright © 2000 BIFOLD FLUIDPOWER LTD. All Rights Reserved

C.A.D. Produced Drawing DO NOT Change By Hand